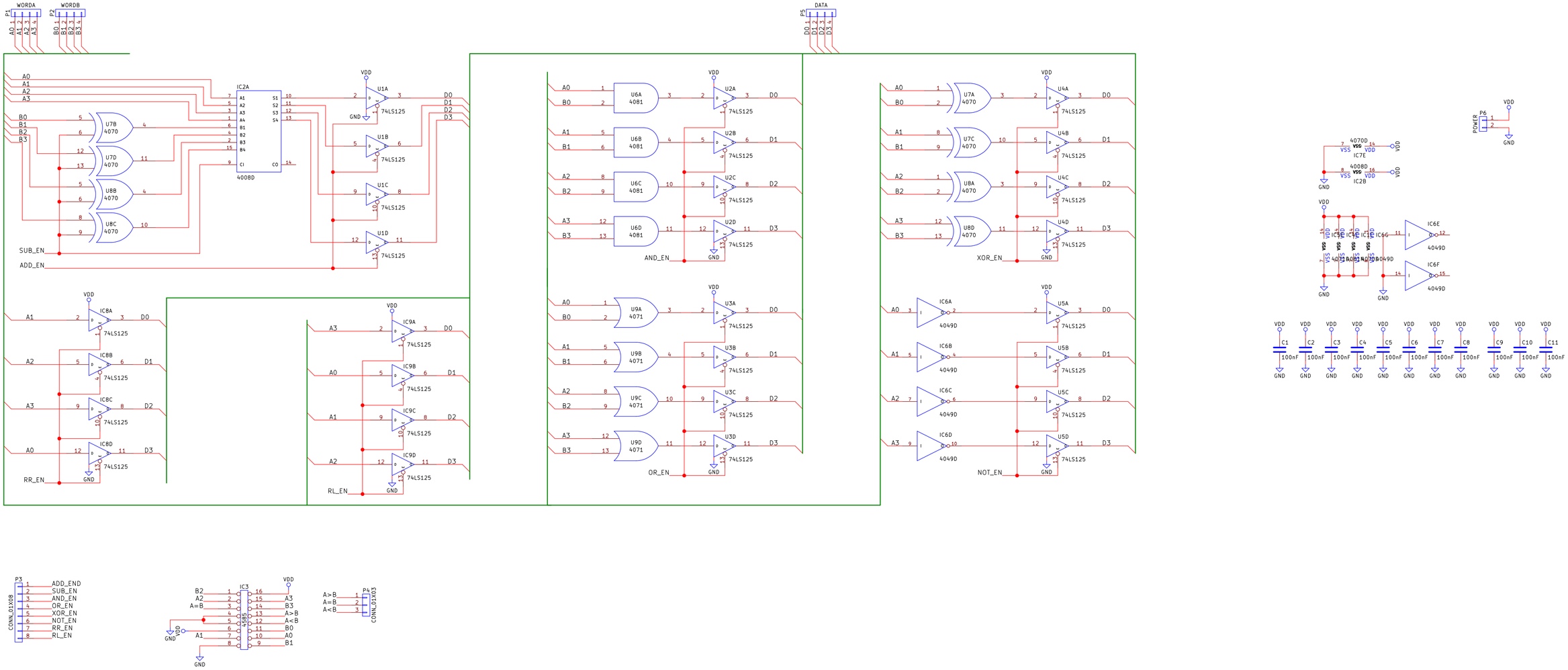

Sheet: /
File: ALU.sch

Title:

Size: A2	Date:	Rev:
KiCad E.D.A. kicad 4.0.6		Id: 1/1